JSH 2 - 3CBL

Hand Shower

Product Specification

Material
ABS Material, Black Matte & Chrome Finished

Product Capability

Filter	: Seal Filter
Maximum Pressure	: 4 kg/cm^2
Maximum Temperature	: 75°C
Working Pressure	: ½ - 4 kg/cm^2

Package Include
ABS Material Head Shower
SS 304 Flexible Hose
Seal Filter
Hanger
Screw & Fisher

Product Features
3-Function Spray :
>Normal Spray
>Jet Spray
>Jet & Normal Spray
Strong and comfort spray
Self-Cleaning Function

Technical Drawing

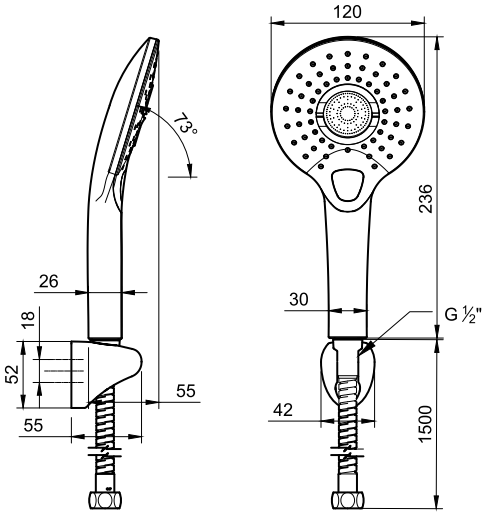

Installation Details

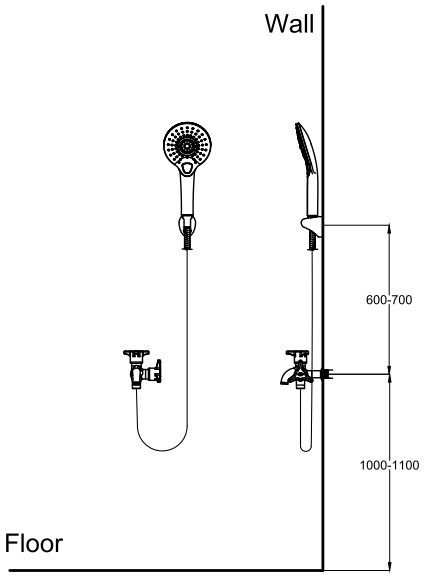

Disclaimer : While we endeavor to provide the most accurate, up-to-date information available, the content on this document may be change due to requirements in different sites, markets and/or countries, out of date or include omissions, inaccuracies or other errors. All content is subject to change without prior notice.